Examples of equipment layouts for different types of workpiece

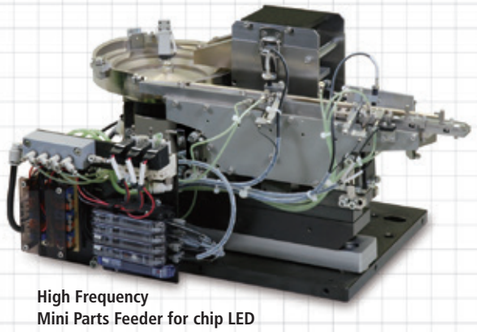

High Frequency
Mini Parts Feeder for chip LED

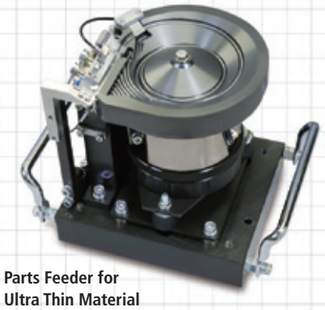

Parts Feeder for
Ultra Thin Material

HSE Series
High Frequency Mini Parts Feeder

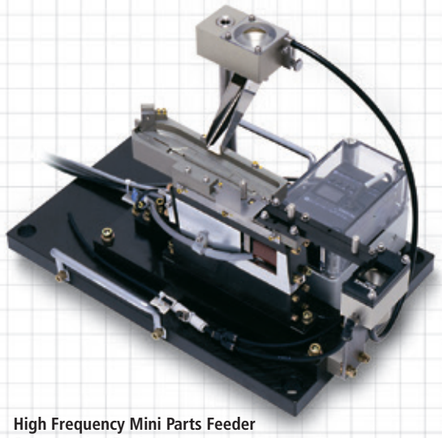

High Frequency Mini Parts Feeder
Space-saving Design

We have a new slogan in Japan; "ECOing" a combination of "eco" and "ing" . This is to promote eco-friendly technological development and manufacturing.
Our ecological activities are of course not limited to Japan and practiced in many countries around the world.

SINFONIA TECHNOLOGY CO., LTD. continually upgrades and improves its products.
Actual features and specifications may therefore differ slightly from those described in this catalog.

Formerly SHINKO ELECTRIC CO., LTD.

SINFONIA TECHNOLOGY CO., LTD.
Shiba NBF Tower, 1-30, Shibadaimon 1-chome, Minato-ku, Tokyo, 105-8564, Japan
TEL +81-3-5473-1864 FAX +81-3-5473-1845

PT. SINFONIA TECHNOLOGY INDONESIA
Graha Paramita 8th Floor Suite E Jl. Denpasar Raya Block D2 KAV. 8 Kuningan, Jakarta 12940 Indonesia
TEL: +62-21-252-3606 (hunting) FAX: +62-21-252-3608

SINFONIA TECHNOLOGY (SINGAPORE) PTE. LTD.
101 Cecil Street #13-12 Tong Eng Building Singapore 069533
TEL +65-6223-6122 FAX +65-6225-2729

SINFONIA TECHNOLOGY (THAILAND) CO., LTD.
12th Floor Room 1205, 319 Chamchuri Square Building, Phayathai Road, Pathumwan Bangkok Bangkok 10330
TEL +66-2160-5068 FAX +66-2160-5069

CODE
E97-003
Printed in Japan 1304EIII

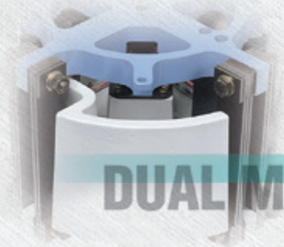

DUAL MOTION PARTS FEEDER

PARTS FEEDER

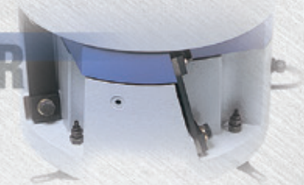

PARTS FEEDER

LINEAR FEEDER

CONTROLLER

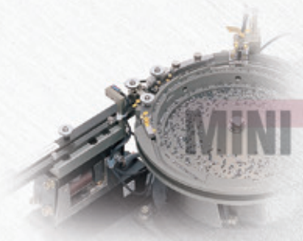

MINI PARTS FEEDER

HOPPER

SINFONIA
SINFONIA TECHNOLOGY CO., LTD.
Former SHINKO ELECTRIC CO., LTD.

CONTENTS

DUAL MOTION PARTS FEEDERS

Smooth, low-noise conveyance

Features

- Setting vertical amplitude at the lowest possible setting greatly reduces bouncing of workpieces. Thin, flat work-pieces remain separate and are conveyed smoothly.
- Work is conveyed as though gliding, with minimal impact between workpieces and track, resulting in minimal noise.
- Compact size makes it possible to interchange them with EA/ER Series parts feeders or those of other manufacturers. (DMS Series)
- A single drive unit can be used for right or left bowl orientation.

DMS Series	Interchangeable with EA/ER series parts feeders or those of other manufacturers.
DM Series	Accommodates high-speed delivery requirements.

Applications

- Plastic, easily damaged workpieces for medical and electronic equipment
- Low-noise conveyance of auto and other metal parts
- Precision equipment and other electronic parts that require highly accurate sorting

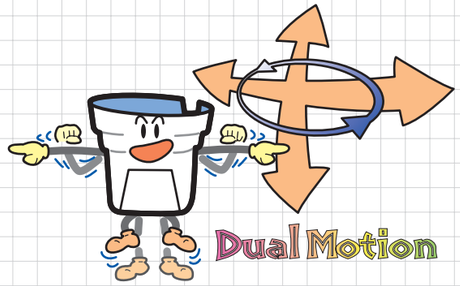

Dual Motion Principle

Friction (conveyance) controlled through elliptical vibration

Elliptical vibration is achieved by controlling optimal phase difference to the horizontal and vertical amplitudes of bowl vibration. Conveyance using elliptical vibration results from controlling friction, and workpieces thus travel as though gliding along the track.

Dual Motion in action

Dual motion is generated in these parts feeders through feedback of vibration in the horizontal and vertical directions, as shown in the diagram. Sensors detect horizontal and vertical amplitude, thereby allowing separate control.

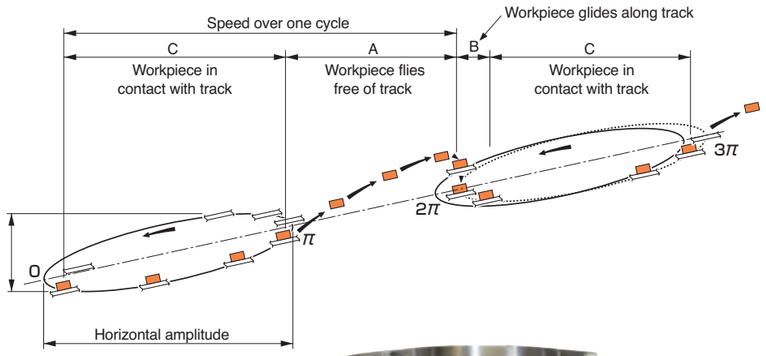

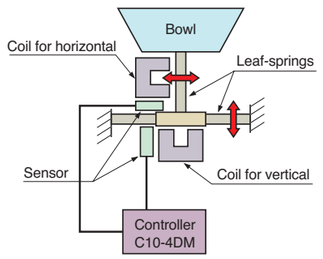

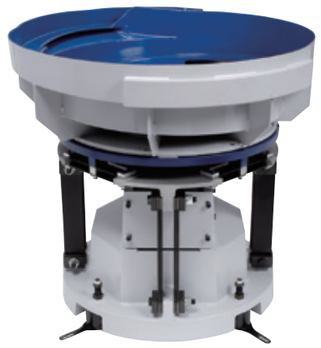

DMS Series Drive Units

Accommodates bowls designed for EA and ER and DMS series (see P.11-12)

DMS-15C/20C Dimensions

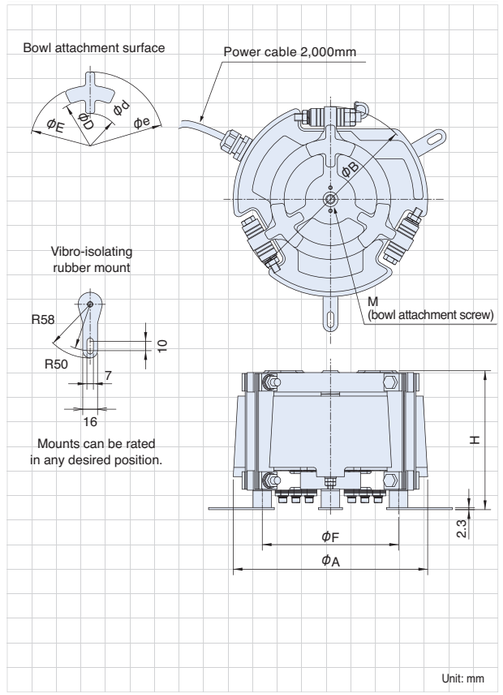

DMS-25C~45C Dimensions

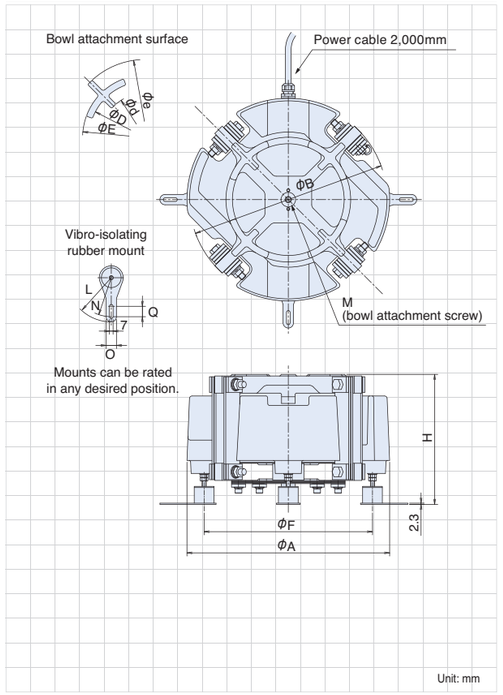

Drive Unit Specifications

Model		DMS-15C	DMS-20C	DMS-25C	DMS-30C	DMS-38C	DMS-45C
Drive unit outer diameter	mm	Φ160	Φ210	Φ260	Φ310	Φ390	Φ460
Drive unit height	mm	130	150	185	220	250	265
Drive unit weight	kg	7	14	25	40	70	110
Rated voltage	V	200					
Rated current A	Horizontal	0.18	0.3	0.6	2.0	2.0	2.0
	Vertical	0.18	0.3	0.3	0.8	0.8	2.0
Vibration frequency	Hz	100～180		70～110			
Unprocessed bowl diameter (cylindrical)	mm	Φ150	Φ200	Φ250	Φ300	Φ375	Φ450
Max. bowl diameter (cylindrical)	mm	Φ250	Φ320	Φ400	Φ500	Φ600	Φ700
Max. amplitude (Unprocessed cylindrical bowl periphery) mm	Horizontal	0.6		1.0			
	Vertical	0.13		0.3			
Max. loaded weight (workpieces + bowl weight)	kg	2.3	4	8	12.5	17	26
Cross section area of power cable	mm²	0.75 x 5 cores					
Applicable controller		C10-4DM					

Dimensions Chart

Unit: mm

Model	H	ΦA	ΦB	M	ΦD	ΦE	ΦF	Φd	Φe
DMS-15C	127～130～133	160	150	M8	72	94	130	50	120
DMS-20C	147～150～153	210	200	M10	100	130	170	70	160

Model	H	ΦA	ΦB	M	ΦF	L	N	O	Q	ΦD	ΦE	Φd	Φe
DMS-25C	182～185～188	260	250	M12	216	58	50	16	10	140	160	100	200
DMS-30C	215～220～225	310	300	M12	252	85	75	20	20	172	192	140	240
DMS-38C	245～250～255	390	380	M16	324	85	75	20	20	215	240	170	300
DMS-45C	260～265～270	460	450	M16	390	85	75	20	20	270	300	210	350

DM Series Drive Units

Can be used with DM series bowls only (see P.5)

DM-30C~45C Dimensions

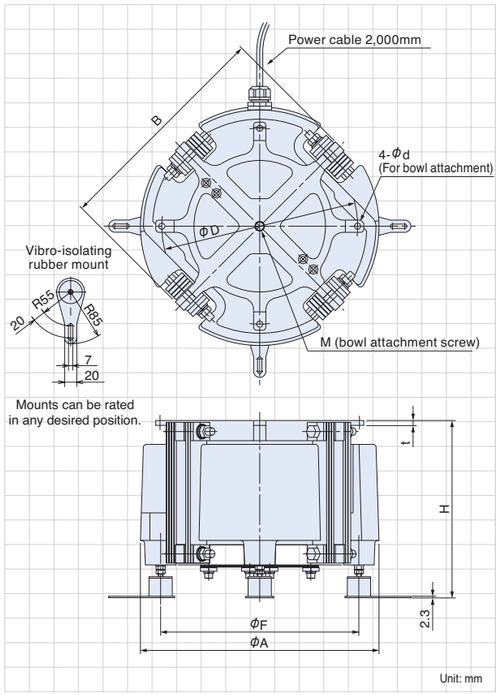

DM-65C Dimensions

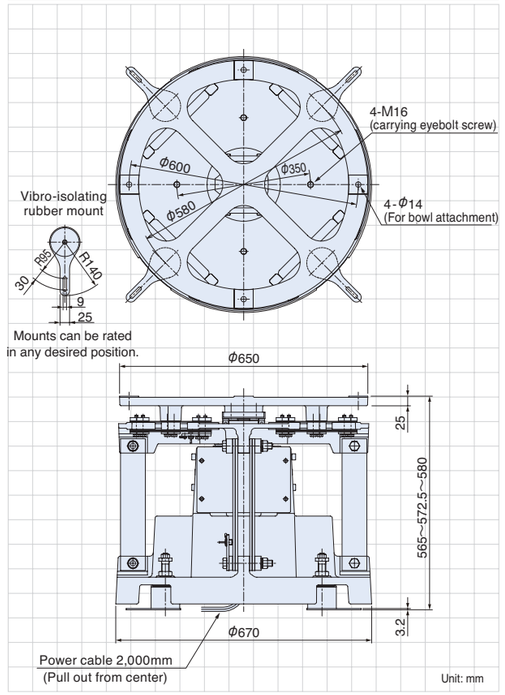

Drive Unit Specifications

Model		DM-30C	DM-38C	DM-45C	DM-65C
Drive unit outer diameter	mm	Φ310	Φ390	Φ460	Φ670
Drive unit height	mm	290	295	365	572.5
Drive unit weight	kg	55	80	140	320
Rated voltage	V	200			
Rated current A	Horizontal	2.0	2.0	4.0	4.0
	Vertical	0.8	0.8	2.0	2.0
Vibration frequency	Hz	70～110			30～40
Unprocessed bowl diameter (cylindrical)	mm	Φ300	Φ375	Φ450	Φ650
Max. bowl diameter (cylindrical)	mm	Φ500	Φ600	Φ700	Φ1000
Max. amplitude (Unprocessed cylindrical bowl periphery) mm	Horizontal	1.8		2.0	4.0
	Vertical	0.3			1.0
Max. loaded weight	kg	9.2	17.0	27.5	70.0
Cross section area of power cable	mm²	0.75 x 5 core			
Applicable controller		C10-4DM			

Dimensions Chart

Unit: mm

Model	H	ΦA	B	M	ΦD	Φd	t	ΦF
DM-30C	285～290～295	310	290	M12	270	10	8	252
DM-38C	290～295～300	390	370	M16	320	10	8	324
DM-45C	360～365～370	460	440	M16	365	12	10	390

DM Series Bowl Dimensions

Diagrams show counter-clockwise orientation

Straight wall Bowl

Track circuits: 2 · 1/4

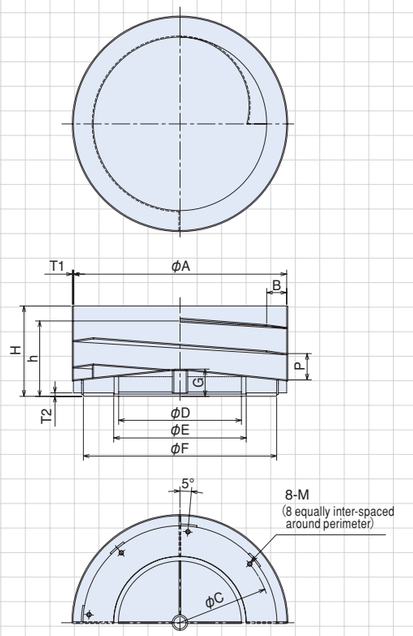

Cascade Bowl

Track circuits: 1 · 1/2

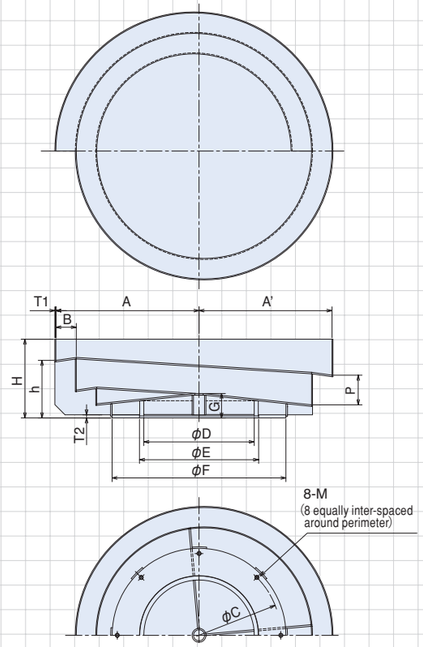

Straight wall Bowl Dimensions Chart

Unit: mm

Model	ϕA	B	ϕC	ϕD	ϕE	ϕF	G	H	h	M	P	T1	T2	Approx. weight (kg)	Capacity (ℓ)
DM-30C	300	25	270	174.7	190.7	290	40	129	105	M8	36	2	6	6.5	0.8
DM-38C	375	35	320	216	232	340	48	159	133	M8	46	2	6	10.0	1.7
DM-45C	450	40	365	282.5	298.5	390	60	197	163	M10	56	3	9	18.0	3.0
DM-65C	650	65	600	363.6	406.4	630	-	302	249.5	M12	90	3	12	54.0	10.0

Cascade Bowl Dimensions Chart

Unit: mm

Model	A	A'	B	ϕC	ϕD	ϕE	ϕF	G	H	h	M	P	T1	T2	Approx. weight (kg)	Capacity (ℓ)
DM-30C	180	167.5	25	270	143	159	290	32	99	74	M8	38	2	6	5.5	1.6
DM-38C	230	215	30	320	174.7	190.7	340	40	124	92	M8	48	2	6	8.5	3.5
DM-45C	280	260	40	365	216	232	390	51	157	116	M10	58	2	9	13.5	6.0
DM-65C	445	405	80	600	363.6	406.4	630	-	267	197	M12	100	3	12	52.0	18.0

Notes
*1 Bowls are made of stainless steel.
*2 Bowls available with clockwise or counter-clockwise orientation.
*3 Charged capacity varies according to the type of workpiece.
*4 When supplied unprocessed, neither inside nor outside has been surface-treated.
*5 When supplying processed, specialized bowls other than standard bowls above can be manufactured.

Straight wall Bowl Selection Guide

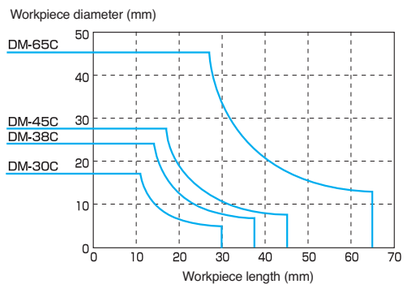

Cascade Bowl Selection Guide

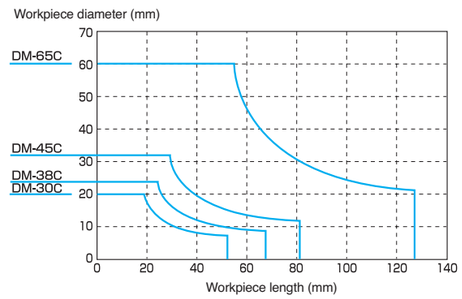

DM Series Controller C10-4DM

New

C10-4DM Dimensions

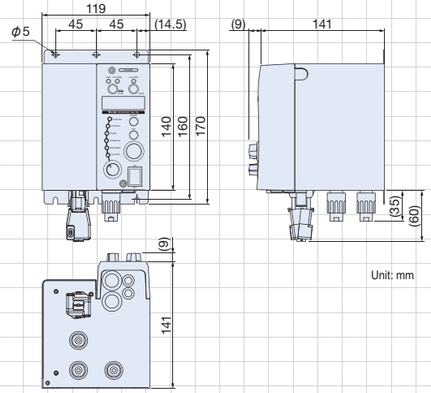

Features

- **Simple and easy start up**
  Stroke sensor gain adjustment is not required. Just by selecting a drive unit model at the initial setting stage, necessary parameters are set automatically.
- **Easy operation**
  'Selection Dial' and 'Setting Encoder' allow for easy operation for anyone.
- **Save more space**
  This controller has the same dimensions as C10-5VF/5VFEF and the footprint is reduced by 36% from the previous model.
- **Easy wiring**
  Between a driving unit and a controller are connected by connectors.
- **Energy-saving auto-tuning**
  Auto tuning function reduces power consumption by tracking the resonance point and keeping vibration frequency on it continuously.
- **Electronic control gives optimal vibration**
  Electronic control of horizontal/vertical amplitudes and phase difference provides ideal vibration characteristics for any type of workpiece.

Specifications

Model		C10-4DM
Input power		AC200-230V ±10%, 50/60Hz
Control system		PWM system
Output	Voltage	0～190V
	Vibration frequency	28～45Hz 65～120Hz 90～180Hz
	Max. current	horizontal: 4A vertical: 2A
Oparating mode	Standard drive	Automatic tuning to horizontal resonance point. By amplitude phase control without frequency setting
Additional features	Constant phase difference control	Horizontal/vertical amplitude phase difference kept constant
	Speed selection	Choice of 4 pre-set speeds by external signal
	Start/Stop control	Stops and starts by external signal
	Output signal	Outputs signal tuned to unit operation
	Soft start	Start-up time 0.2~4.0 seconds
	On/Off delay timer	Delay time 0.2~60 seconds
	Sensor power source	3P power plug gives DC12V, max. 80mA
Synchronized power source	Function	Power source synchronized to parts feeder operation (RUN)
	Control system	On/Off control through a triac
	Output voltage	As power source input to controller
	Max. current	2A
Other	Noise resistant voltage	Above 1000V
	Ambient temperature range	0～40°C
	Ambient humidity range	10～90% (No condensation)
	Applicable Space	Indoor (Place where no corrosive gas, and dust.)
	Color of case	Japan Paint Industry Association U75-70D
	Weight	2.0kg
Compatible equipment		DM-30C, 38C, 45C, 65C DMS-15C, 20C, 25C, 30C, 38C, 45C

EA Series 100~180Hz

Pictures show counter-clockwise orientation

For handling a wide range of very small, precision workpieces

With high vibration frequencies of 100 to 180 Hz and small amplitude of 0.6 mm,
this series is ideal for very small (10 mm or less), high precision or ultra thin workpieces.
Can accommodate bowls ranging from 150 to 700 mm in diameter for highly reliable conveyance.

EA-45

EA-38

EA-30

EA-25

EA-20

EA-15

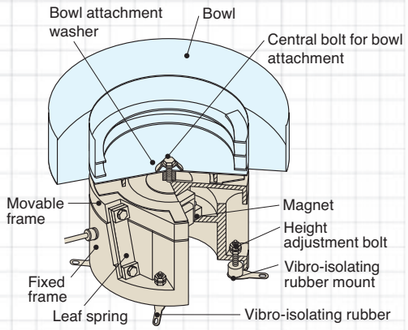

EA/ER Series Structural Diagram

Specifications

Model		EA-15	EA-20	EA-25	EA-30	EA-38	EA-45
Drive unit outer diameter	mm	φ160	φ210	φ260	φ310	φ390	φ460
Drive unit height	mm	130	155	190	220	260	280
Drive unit weight	kg	8.5	17	30	47	81	115
Leaf-spring attachment angle	degree	15					
Rated voltage	V	200 (*1)					
Rated current	A	0.4	0.8	1.5	2.0	2.5	3.0
Vibration frequency	Hz	100～180					
Unprocessed bowl diameter (cylindrical)	mm	150	200	250	300	375	450
Max. bowl diameter (cylindrical)	mm	250	330	420	500	600	700
Max. amplitude (periphery of standard cylindrical bowl)	mm	0.6			0.8		
Max. loaded weight (workpieces + bowl weight)	kg	2.3	4	8	12.5	17	26
Cross section area of power cable	mm²	0.75 x 3 cores				1.25 x 3 cores	
Compatible controllers	AC200V	C10-1VF/1VFEF		C10-3VF/3VFEF			
	AC100V	C10-1VF/1VFEF+C10-TR		C10-3VF/3VFEF+C10-TR			

Note *1 With an AC100V power source, use C10-TR transformer (sold separately).

ER Series 50~90Hz

Pictures show counter-clockwise orientation

Steady delivery of workpieces of all sizes

With low vibration frequencies of 50 to 90Hz and a large amplitude of 1.2 mm,
this series is suited to workpieces from 10 mm up in size.
Bowl diameters from 250 to 1100 mm can be accommodated, to give powerful feeder performance.

ER-75B

ER-65B

ER-55B

ER-45B

ER-38B

ER-30B

ER-25B

Specifications

Model		ER-25B	ER-30B	ER-38B	ER-45B	ER-55B	ER-65B	ER-75B
Drive unit outer diameter	mm	φ260	φ310	φ390	φ460	φ560	φ660	φ760
Drive unit height	mm	198	225	264	286	321	321	321
Drive unit weight	kg	30	47	81	115	160	200	260
Leaf-spring attachment angle	degree	20						
Rated voltage	V	200 (*1)						
Rated current	A	1.0	1.5	2.0	2.5	5.0	5.0	5.0
Vibration frequency	Hz	50～90						
Unprocessed bowl diameter (cylindrical)	mm	250	300	375	450	550	650	750
Max. bowl diameter (cylindrical)	mm	420	500	600	700	830	980	1130
Max. amplitude (periphery of standard cylindrical bowl)	mm	1.2				1.4		
Max. loaded weight (workpieces + bowl weight)	kg	8	12.5	17	26	70	85	125
Cross section area of power cable	mm²	0.75 x 3cores		1.25 x 3cores		2.0 x 3cores		
Compatible controllers (*2)	AC200V	C10-1VF/1VFEF	C10-3VF/3VFEF			C10-5VF/5VFEF		
	AC100V	*2	C10-3VF/3VFEF+C10-TR			—		

Notes *1 With an AC100V power source, use C10-TR transformer (sold separately).
*2 C10-1VF/1VFEF+C10-TR

Dimensions EA/ER Series

Diagrams show counter-clockwise orientation

EA-15/20

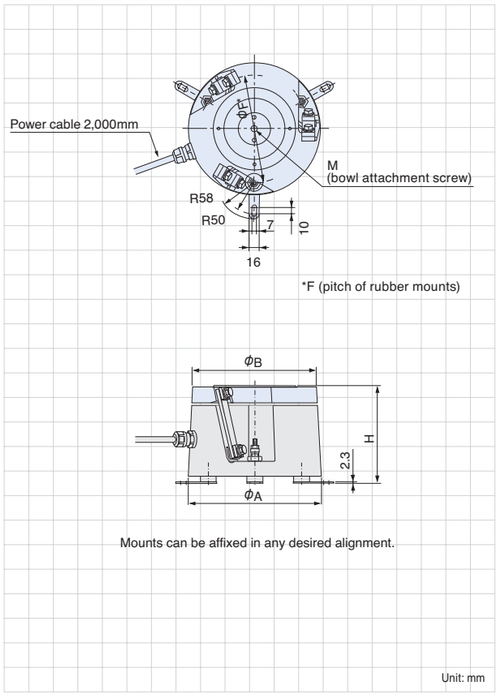

Unit: mm

Model	H	ΦA	ΦB	M	ΦF
EA-15	130-133-136	160	150	M8	130
EA-20	152-155-158	210	200	M10	170

EA-25/30/38/45

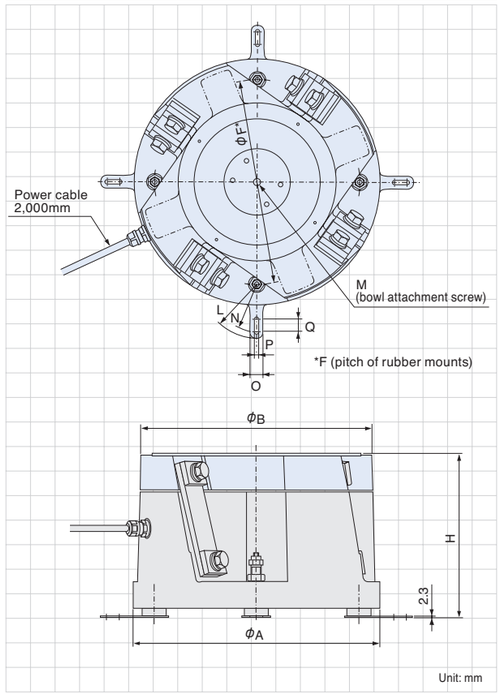

Unit: mm

Model	H	ΦA	ΦB	M	ΦF	L	N	O	P	Q
EA-25	187-190-193	260	250	M12	216	58	50	16	7	10
EA-30	215-220-225	310	300	M12	252	85	75	20	7	20
EA-38	255-260-265	390	375	M16	324	85	75	20	7	20
EA-45	275-280-285	460	450	M16	390	85	75	20	7	20

ER-25B/30B/38B/45B

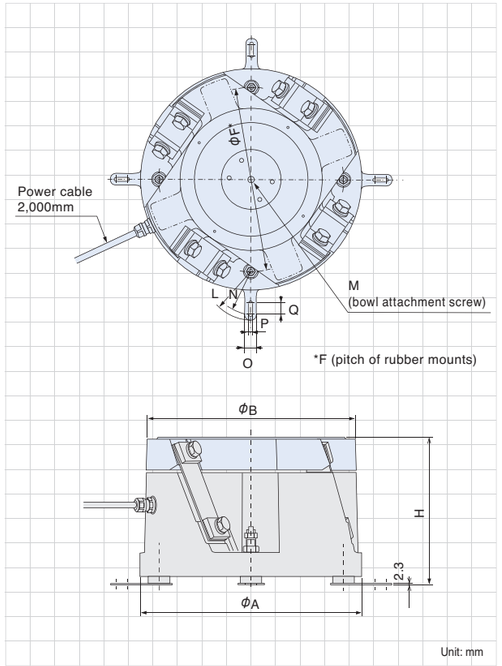

ER-55B/65B

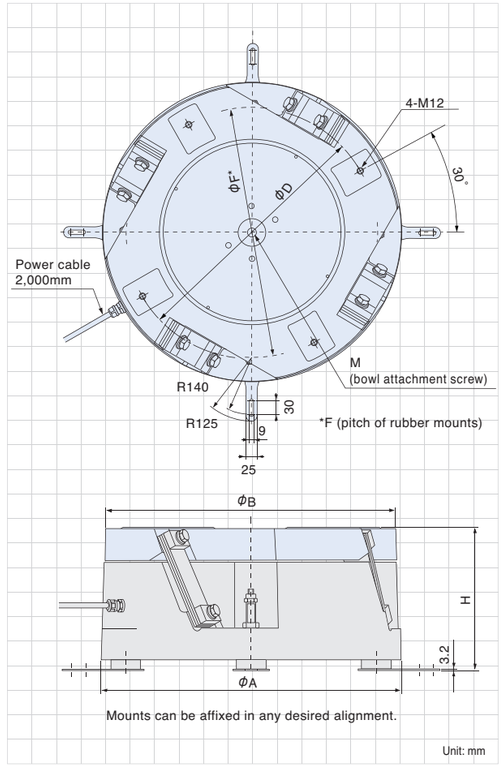

Unit: mm

Model	H	ΦA	ΦB	M	ΦF	L	N	O	P	Q
ER-25B	194-198-202	260	250	M12	216	58	50	16	7	10
ER-30B	218-225-232	310	300	M12	252	85	75	20	7	20
ER-38B	257-264-271	390	375	M16	324	85	75	20	7	20
ER-45B	280-286-292	460	450	M16	390	85	75	20	7	20

Unit: mm

Model	H	ΦA	ΦB	ΦD	M	ΦF
ER-55B	312-321-330	560	550	460	M20	450
ER-65B	312-321-330	660	650	580	M20	550
ER-75B	312-321-330	760	750	640	M20	640

ER-75B

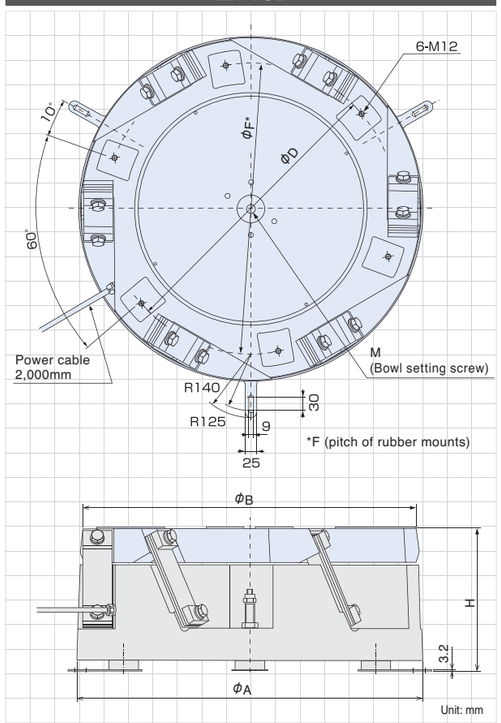

Bowl Dimensions EA/ER/DMS Series

Diagrams show counter-clockwise orientation

Straight Wall Bowls

Track circuits: 2 · 1/4

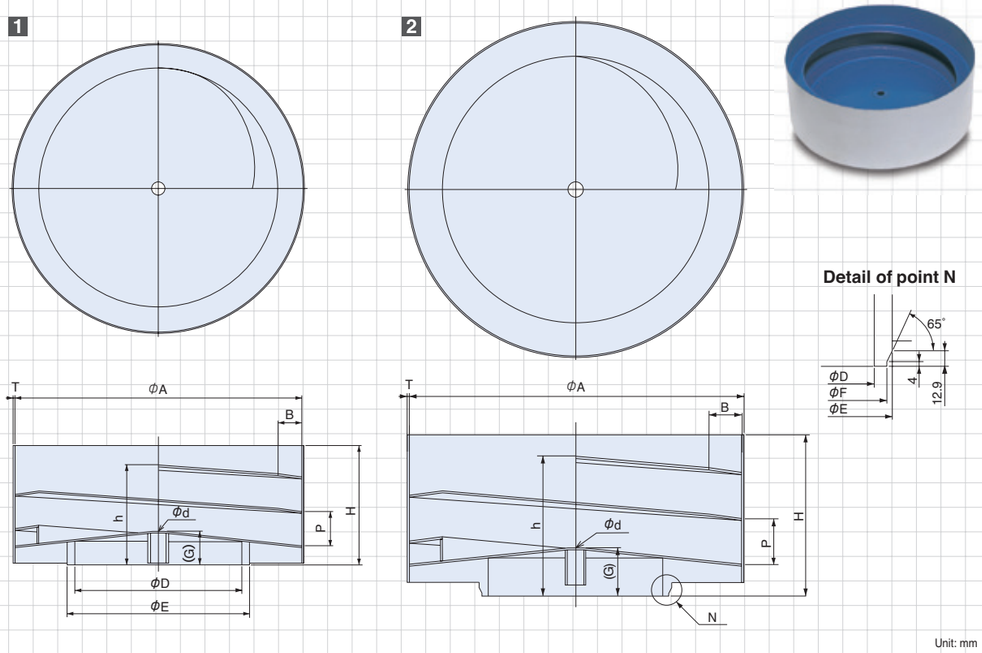

1

Unit: mm

Model	ΦA	B	ΦD	ΦE	G	H	P	h	Φd	T	Approx. Weight (kg)	Capacity (ℓ)
EA/DMS-15	150	12	73.1	89.1	22	70	18	56	8.2	1.5	1.1	0.1
EA/DMS-20	200	18	104	120	25	85	24	69	10.2	1.5	1.8	0.2
EA/ER/DMS-25	250	20	143	159	27	100	30	83	12.2	2	3.2	0.5
EA/ER/DMS-30	300	25	174.7	190.7	35	125	36	101	12.2	2	5.0	0.8
EA/ER/DMS-38	375	35	216	232	43	155	46	129	16.2	2	8.0	1.7
EA/ER/DMS-45	450	40	282.5	298.5	52	190	56	156	16.2	3	15.0	3.0

2

Unit: mm

Model	ΦA	B	ΦD	ΦE	ΦF	G	H	P	h	Φd	T	Approx. Weight (kg)	Capacity (ℓ)
ER-55B	550	55	288.5	318.5	309.2	78	266	76	221	25	3	28	5
ER-65B	650	65	373	406.4	397.2	88	311	90	258	25	3	39	10
ER-75B	750	75	477.8	508	498.7	99	366	108	303	25	3	54	15

Notes 1) Bowls are made of stainless steel, and standard color is differ from color of pictures above. 2) Bowls available with clockwise or counter-clockwise orientation.
3) Capacity varies according to the type of workpiece. *When supplied unprocessed, neither inside nor outside has been surface-treated.

Straight wall Bowl Selection Guide

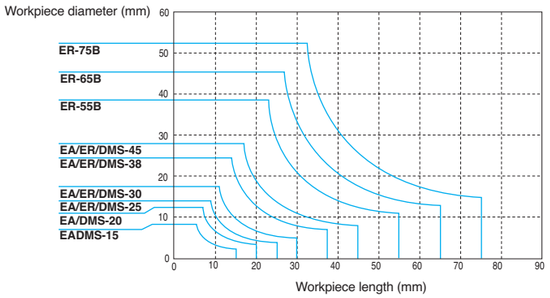

Cascade Bowls

Track circuits: 1 · 1/2

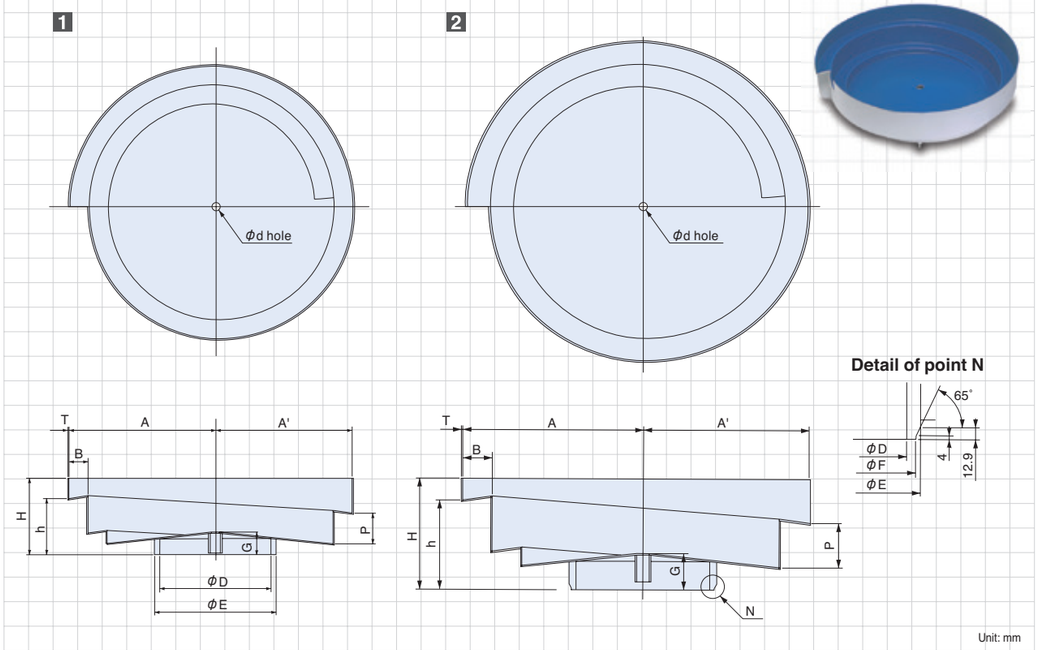

1

Unit: mm

Model	Dia. approx.	A	A'	B	H	h	P	Φd	ΦD	ΦE	G	T	Approx. Weight (kg)	Capacity (ℓ)
EA/DMS-15	215	110	102.5	15	65	50	24	8.2	73.1	89.1	23	2	1.3	0.4
EA/DMS-20	280	145	135	20	80	59	30	10.2	104	120	26	2	2.2	0.8
EA/ER/DMS-25	350	180	167.5	25	95	70	38	12.2	143	159	28	2	3.3	1.6
EA/ER/DMS-30	450	230	215	30	120	88	48	12.2	174.7	190.7	36	2	5.4	3.5
EA/ER/DMS-38	540	280	260	40	150	109	58	16.2	216	232	45	2	8	6
EA/ER/DMS-45	650	335	310	50	185	135	72	16.2	282.5	298.5	54	3	16	10

2

Unit: mm

Model	Dia. approx.	A	A'	B	H	h	P	Φd	ΦD	ΦE	ΦF	G	T	Approx. Weight (kg)	Capacity (ℓ)
ER-55B	750	390	358	64	240	193	96	25	288.5	318.5	309.2	78	3	26	17
ER-65B	850	445	405	80	306	236	120	25	373	406.4	397.2	88	3	37	20
ER-75B	950	495	455	80	346	256	130	25	477.8	508	498.7	99	3	47	25

Notes 1) Bowls are made of stainless steel, and standard color is differ from color of pictures above. 2) Bowls available with clockwise or counter-clockwise orientation.
3) Capacity varies according to the type of workpiece. *When supplied unprocessed, neither inside nor outside has been surface-treated.

Cascade Bowl Selection Guide

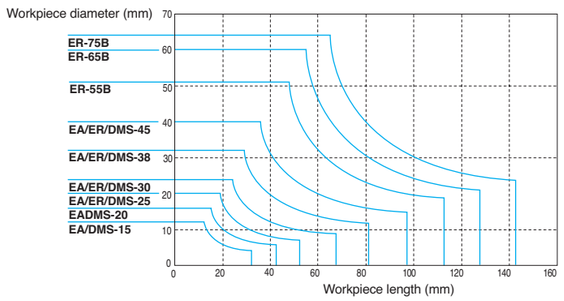

Linear Feeder Combinations EA/ER/DMS Series

Diagrams show counter-clockwise orientation

1 EA/DMS-15+LFB-300

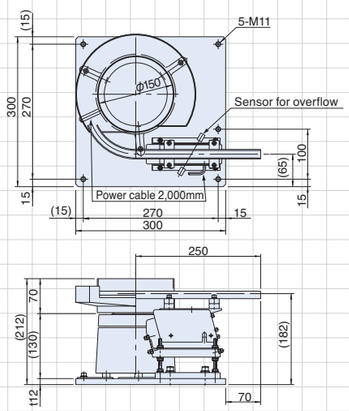

2 EA/DMS-20+LFB-300

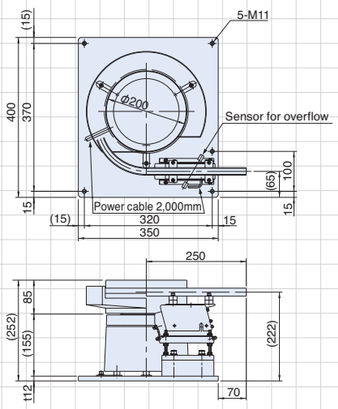

3 EA/ER/DMS-25+LFB-400

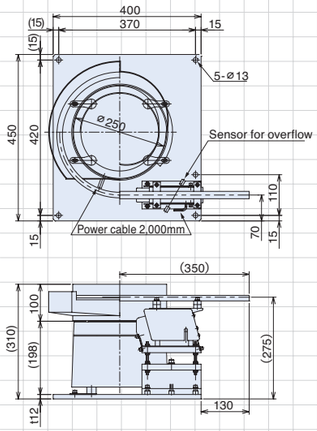

4 EA/ER/DMS-25+LFG-600

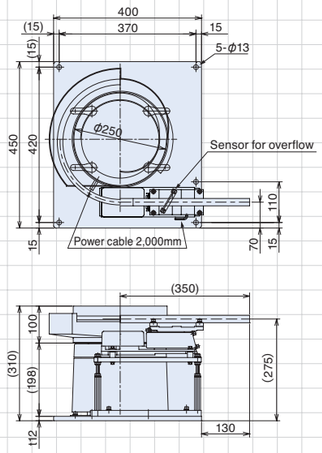

5 EA/ER/DMS-30+LFB-400

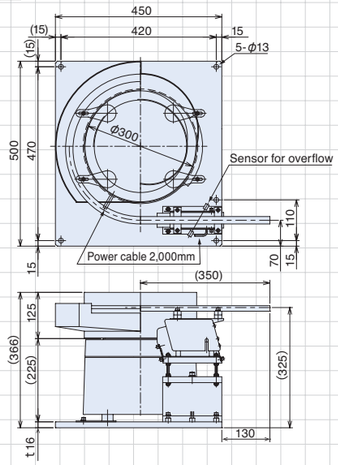

6 EA/ER/DMS-30+LFG-600

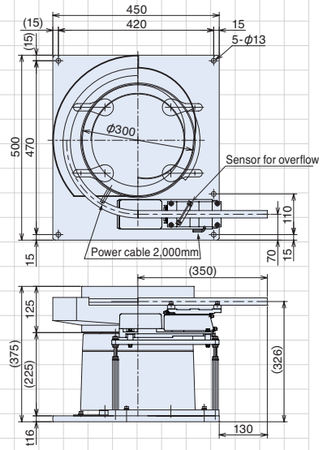

7 EA/ER/DMS-38+LFB-550

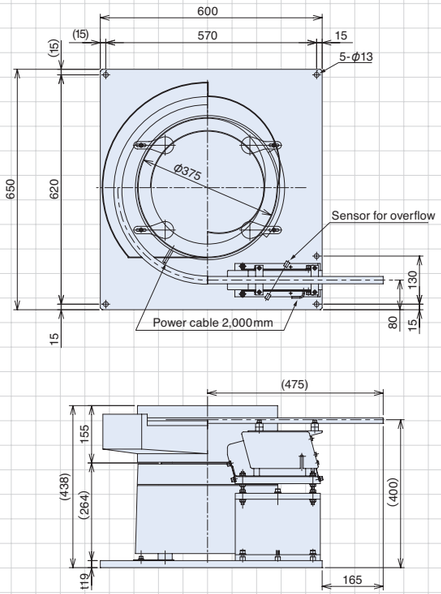

8 EA/ER/DMS-38+LFG-750

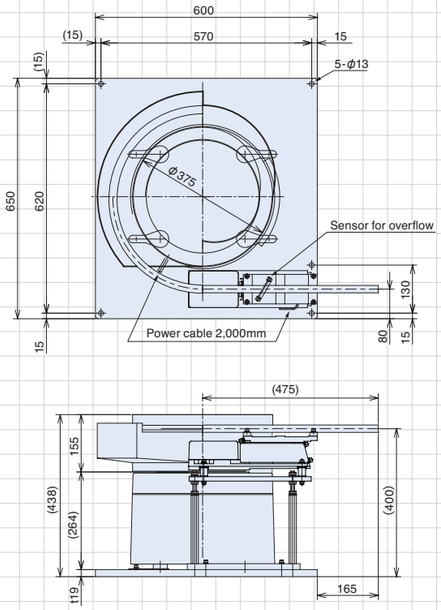

9 EA/ER/DMS-45+LFB-550

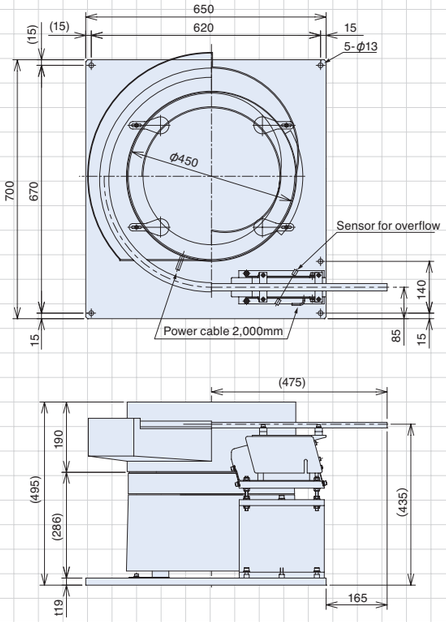

10 EA/ER/DMS-45+LFG-750

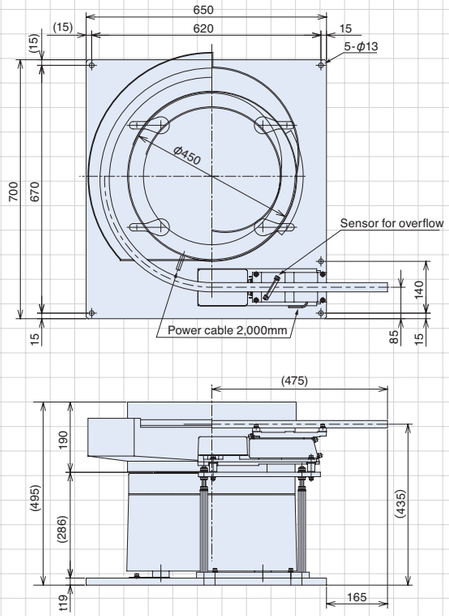

Unit: mm

Linear Feeder Combinations ER Series

11 ER-55B+LFG-900

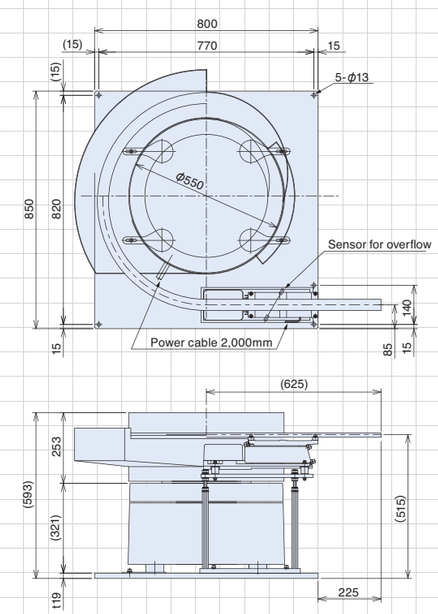

12 ER-65B+LFG-900

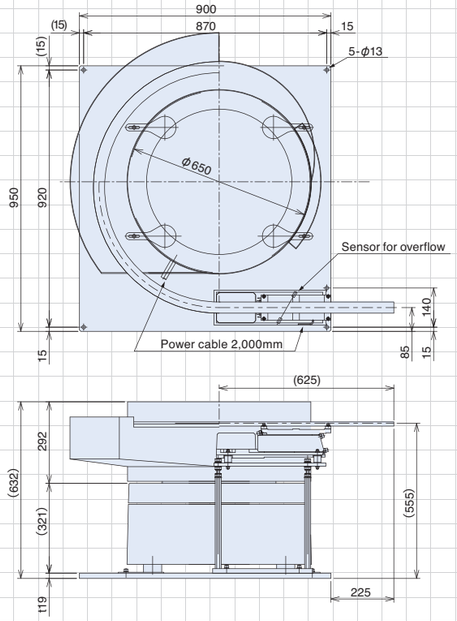

13 ER-75B+LFG-900

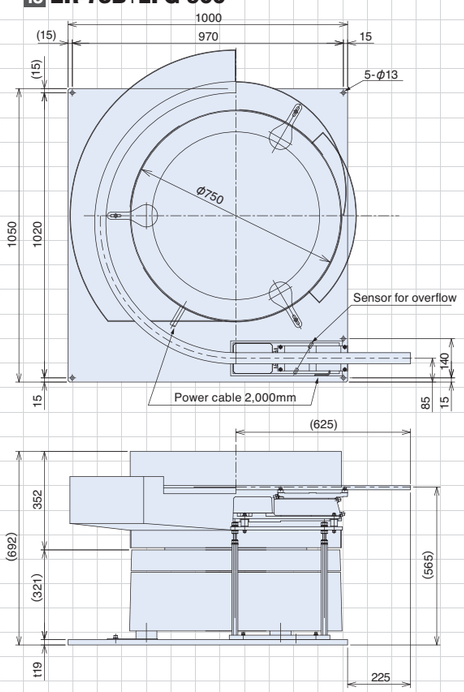

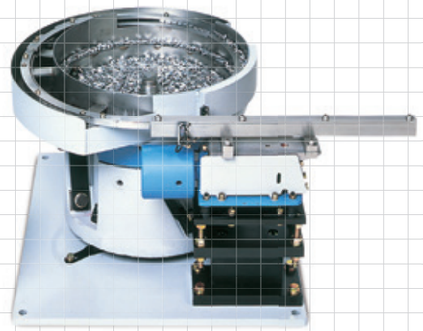

Parts Feeder	Linear Feeder Model					
	Leaf-spring vibro-isolating			Rubber-mount vibro-isolating		
	LFB-300	LFB-400	LFB-550	LFG-600	LFG-750	LFG-900
EA/DMS15	1					
EA/DMS-20	2					
EA/ER/DMS-25		3		4		
EA/ER/DMS-30		5		6		
EA/ER/DMS-38			7		8	
EA/ER/DMS-45			9		10	
ER-55B						11
ER-65B						12
ER-75B						13

Notes:
All diagrams above show straight wall bowls, however combinations are also possible with track-stepped bowls. (Only bowl diameter and chute exit height vary; all other dimensions are the same for both types of bowl)
A wide range of combinations is possible, depending on the type of workpiece. We are happy to discuss customers' individual requirements.

Unit: mm

LFBR Series –*Leaf-Spring Vibro-Isolating Type*

Low-reaction force linear feeder with less floor reaction

A leaf-spring vibro-isolating type linear feeder with reduced floor reaction. We enabled low-reaction force, high accuracy and smooth parts conveyance through our review of the drive unit mechanism in detail.

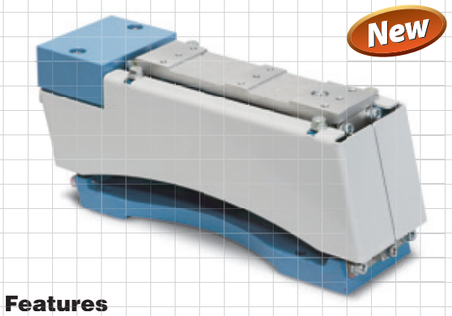

Features

- **Floor reaction force reduce design**
  By reviewing the drive unit mechanism, floor reaction force has been drastically reduced, compared with the existing leaf-spring vibro-isolating type.
- **Leaf spring and Core gap adjustment are unnecessary**
  No troublesome leaf-spring adjustment or even core gap adjustment is necessary, by using the available C9, C10 series variable frequency digital controllers.
- **No vibrational interference**
  Because of the middle frequency vibration range (between Full and Have wave), vibrational interference will not occur, when used in combination with other parts feeders.
- **Uniform chute vibration angle**
  The entire chute vibration angle become uniformly, and has improved the parts conveyance become much more smoothly.
- **Low power consumption**
  Driven near the resonance range enable to gain sufficient stroke in low current.

LFBR-350B/450B/600B Dimensions

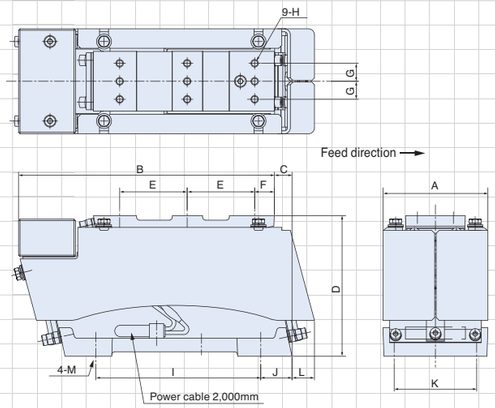

Unit: mm

Specifications

Model		LFBR-350B	LFBR-450B	LFBR-600B
Rated voltage	V	200		
Rated current	A	0.12	0.14	0.2
Vibration frequency	Hz	95～120	75～100	75～90
Drive unit weight	kg	3.5	5.5	10.5
Leaf-spring angle	degree	12	15	15
Max. amplitude	mm	0.60	0.65	0.75
Cross section area of power cable	mm²	0.75 x 3 cores		
Compatible controller	AC200V	C10-1VF / C10-1VFEF		
	AC100V	C10-1VF+C10-TR / C10-1VFEF+C10-TR		

Dimensions Chart

Unit: mm

Model	A	B	C	D	E	F	G	H	I	J	K	L	M
LFBR-350B	70	170.5	12	93.5	45	13	12	M5	110	21	55	15	M8
LFBR-450B	80	205	20	107.5	55	13	14	M6	130	38	60	12	M8
LFBR-600B	95	274.5	25.5	133	75	16.5	19	M6	190	46	75	14	M10

Chute Specifications, Including Basic Position

Unit: mm

Model	Max. length	Max. width	Min. thickness	Weight range (kg)	Basic position (at max. chute length)				
					L1	L2	L3	L4	L5
LFBR-350B	350	40	9	0.4～1.2	110~150	90	30~110	39	67.5
LFBR-450B	450	45	12	1.2～2.3	150~190	110	70~150	46	82
LFBR-600B	600	55	14	2.3～4.0	200~250	150	90~200	55	108

LFBR Series

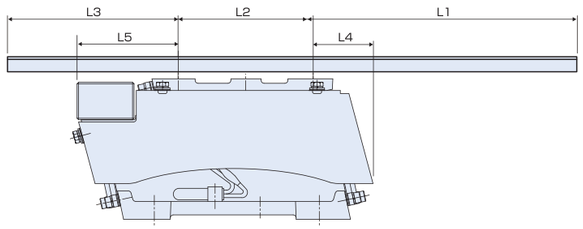

LFB Series –*Leaf-Spring Vibro-Isolating Type*

Uniform vibration with no need for adjustment

Use of a variable frequency controller eliminates the need for leaf-spring and core-gap adjustments.
Provides uniform vibration with no adjustments necessary, and is easily installed to link up with other equipment, greatly improving ease of use. Can accommodate heavier chute weights and longer overhangs, to widen scope for applications. The drive unit is slim, and with virtually no vibration interference it can easily be combined with parts feeders, to suit wide-ranging combinations.
The three models in this series can be used selectively to handle all sizes and shapes of workpiece.

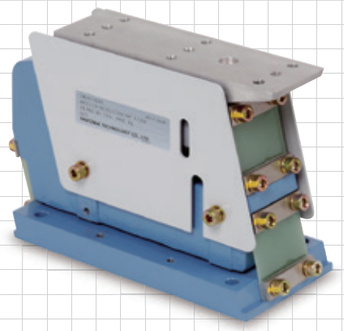

Features

- **Simple, uniform vibration**
  Use with heavier chutes and longer overhangs opens a wider range of applications. Consistent, uniform vibration is supplied without the need for adjustment.
- **Energy saving type**
  Energy consumption cut by half, compared with our earlier models.

LFB-300/400/550 Dimensions

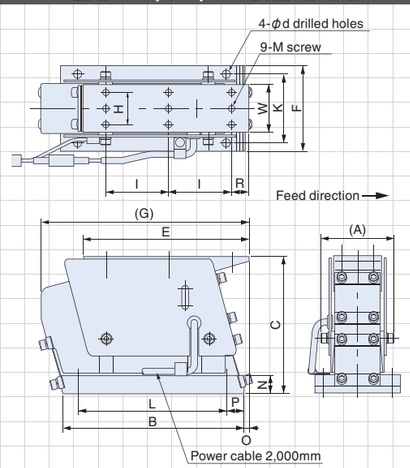

Specifications

Model		LFB-300	LFB-400	LFB-550
Rated voltage	V	200		
Rated current	A	0.04	0.08	0.15
Vibration frequency	Hz	90～120	80～110	75～100
Drive unit weight	kg	3.0	5.0	10.0
Leaf-spring angle	degree	15		
Max. amplitude	mm	0.6	0.65	0.75
Cross section area of power cable	mm²	0.75 × 3 cores		
Compatible controller	AC200V	C10-1VF / C10-1VFEF		
	AC100V	C10-1VF+C10-TR / C10-1VFEF+C10-TR		

Dimensions Chart

Unit: mm

Model	A	B	C	E	F	G	H	I	K	L	M	N	O	P	R	W	d
LFB-300	57	135	97	124	65	150	24	45	55	110	5	16	3	10	15	38	6
LFB-400	65	160	120	145	75	180	28	55	60	130	6	16	5	15	15	42	7
LFB-550	79	230	143	200	90	255	38	75	75	190	6	19	5	20	20	52	9

Chute Specifications, Including Basic Position

Unit: mm

Model	Max. length	Max. width	Min. thickness	Weight range (kg)	Basic position (at max. chute length)				
					L1	L2	L3	L4	L5
LFB-300	300	50	6	0.4～1.0	66	110	40	124	3
LFB-400	400	50	10	0.8～2.0	105	150	70	145	5
LFB-550	550	65	14	1.4～3.5	140	210	85	200	5

LFB Series

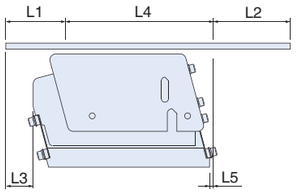

LFG Series –*Rubber Mount Vibro-Isolating Type*

Accommodates a wide range of chutes for ideal conveyance

The variable frequency controller installed as standard eliminates need for leaf-spring and core-gap adjustments. Easy installation and coordination make it much easier to use, and by adjusting position of the rear-end weight, conveyance irregularities can be quickly and easily eliminated. With minimal lateral movement, there is virtually no vibration interference, making it easy to combine with parts feeders for stabilized delivery. The three models in this series allow a full range of equipment combinations, and cover all shapes and sizes of workpiece. A leaf-spring vibro-isolating type linear feeder with reduced floor reaction.We enabled low-reaction force, high accuracy and smooth parts conveyance through our review of the drive unit mechanism in detail.

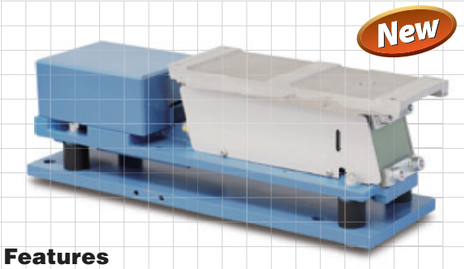

Features

- **Applicable longer and wider linear chutes.**
  Because new LFG series have longer body from conventional
  models, more long and wide chutes can be applicable.
- **Stable vibrating conveyance**
  It prevents move of body caused by vibration with using original vibration isolation rubber.
- **Withstand load improved**
  Withstand load improved by applying a long chute
- **Almost same size of drive unit compared with conventional size.**
  Ability improved with same size from conventional size.

LFG-600 Dimensions

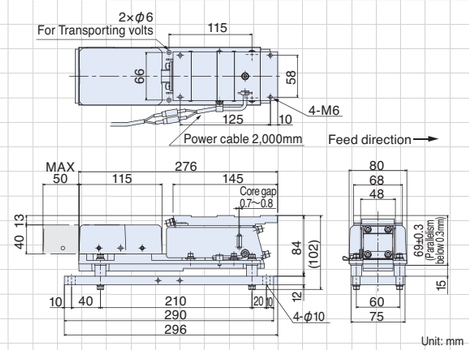

LFG-750 Dimensions

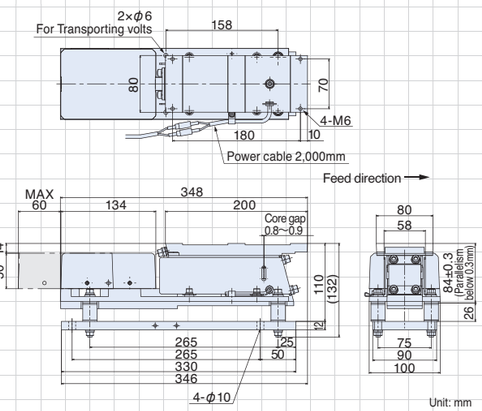

Specifications

Model		LFG-600	LFG-750	LFG-900
Rated voltage	V	200		
Rated current	A	0.2	0.37	0.41
Vibration frequency	Hz	80～110	80～110	80～110
Drive unit weight	kg	7.4	13.2	19.6
Leaf-spring angle	degree	15		
Max. amplitude	mm	0.65	0.75	0.9
Cross section area of power cable	mm²	0.75 × 3 cores		
Compatible controller	AC200V	C10-1VF / C10-1VFEF		
	AC100V	C10-1VF+C10-TR / C10-1VFEF+C10-TR		

Chute Specifications, Including Basic Position

Unit: mm

Model	Max. length	Max. width	Min. thickness	Weight range (kg)
LFG-600	600	50	10	1.4～3.6
LFG-750	750	65	14	2.2～5.4
LFG-900	900	75	18	4.0～9.8

Model	Basic position (at max. chute length)					
	L0	L1	L2	L3	L4	L5
LFG-600	600	180	275	29	145	6
LFG-750	750	220	330	74	200	16
LFG-900	900	260	390	92	250	18

LFG-900 Dimensions

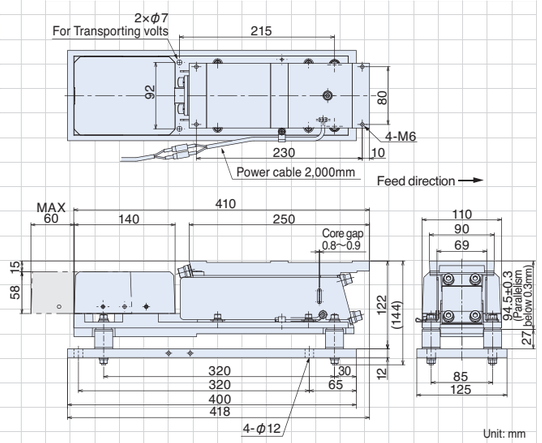

LFG Series

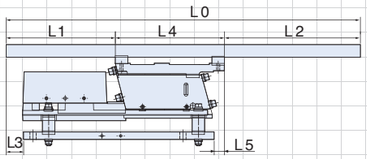

LF Series – *Direct Mount Type*

Simple and compact. Handles a wide range of micro-sized and precision parts

Developed for stabilized delivery of non-specialized micro-sized and precision parts, this series uses a small, electromagnetic drive unit that is simple and compact. Unmounted, with full wave operation to give excellent conveyance capacity for small volumes of non-specialized micro-sized workpieces. Maintenance is very straightforward and minimizes costs.

LF-02/04 Dimensions

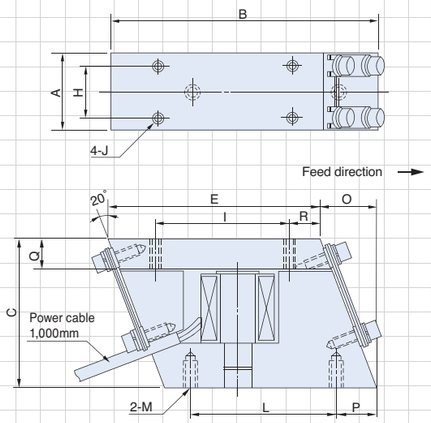

Features

- **Handles a wide range of small parts**
  Handles a wide range of non-specialized micro-sized, precision parts
- **Simple and low cost**
  Provides a simple, low-cost solution for small-volume applications.
- **Easy, convenient installation**
  Compact design allows easy, convenient installation.

Specifications

Model	Rated Voltage (V)	Rated Current (A)	Vibration frequency (Hz)	Weight (kg)	Standard compatible controllers
LF-02	100/110	0.12	100～180(∗100/120)	0.44	C10-1VF/1VFEF C4-5B
LF-04	100/110	0.22	100～180(∗100/120)	1.0	

∗When C4-5B was used.

Dimensions Chart

Unit: mm

Model	A	B	C	E	H	I	J	L	M	O	P	Q	R
LF-02	22	approx. 81	44.3	65	15	40	M3	40	M4	16	15	9	10
LF-04	32	approx. 101	57.3	80	20	50	M4	55	M5	21	15	12	12

Chute Specifications

Unit: mm

Compatible linear feeder	Max. length	Max. width	Max. weight (kg)
LF-02	180	20	0.2
LF-04	240	30	0.4

MF Series – *Direct Mount Type*

Compact yet powerful, for speedy delivery and versatile, longer distance conveyance

A new type of electromagnetic drive unit ideal for use with chutes handling very small, flat, and precision parts. Takes full advantage of merits of half wave operation for smooth conveyance of fragile and easily damaged workpieces.

MF-04C/15C Dimensions

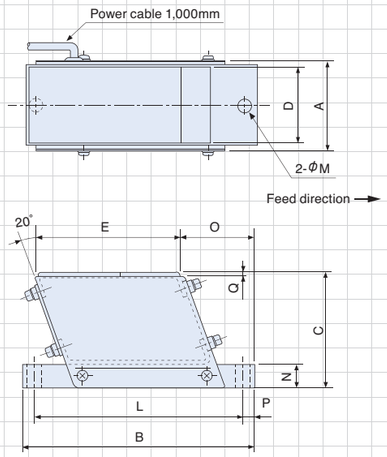

Features

- **Compact yet powerful**
  Small unit size with half wave operation capable of longer distance conveyance.
- **Speedy delivery, and versatile, longer distance conveyance**
  High vibration frequency and amplitude give speedy delivery, and can meet a range of loner distance conveyance requirements
- **Easy, convenient installation**
  Compact design takes up little space and allows easy, convenient installation.

*Users are asked to drill holes as required for chute attachment.

Specifications

Model	Voltage (V)	Current (A)	Vibration (Hz)	Weight (kg)	Standard compatible controllers
MF-04C	100/110 200/220	0.13 0.065	50～90(∗50/60)	0.6	C10-1VF/1VFEF C4-5B
MF-15C	100/110 200/220	0.2 0.1	50～90(∗50/60)	1.8	

∗When C4-5B was used.

Dimensions Chart

Unit: mm

Model	A	B	C	D	E	L	M	N	O	P	Q
MF-04C	46	106	56	38	62	88	7	9	38	9	3.2
MF-15C	56	160	78	52	100	144	9	16	52	8	3.2

Chute Specifications

Unit: mm

Compatible linear feeder	Max. length	Max. width	Max. weight (kg)
MF-04C	300	35	0.4
MF-15C	450	45	1.5

Note: Chute must straddle drive unit to distribute weight.

LF Series – *Coil-Spring Vibro-Isolating Type*

Swift, stable conveyance of high volumes of large workpieces

Large-capacity electromagnetic drive unit has strong coil springs positioned at front and rear, and drive controlled by amplitude angle adjustment, to give speedy, steady, straight-line delivery of large-sized workpieces. The low-floored half-wave drive provides uniform amplitude and vibration frequency to eliminate irregularities during high-volume conveyance of large workpieces.

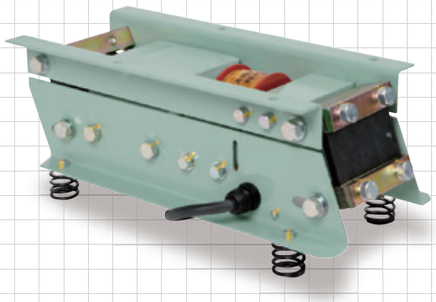

LF-30/40 Dimensions

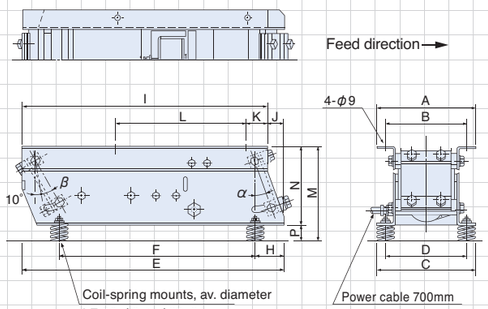

Unit: mm

Features

- **Large size feeder provides smooth workpiece delivery**
  Large, vibro-isolating feeder that keeps the flow of workpieces smooth through adjustment of leaf-spring angle.
- **Fast, stable delivery of high volumes of large workpieces**
  Extremely high conveyance efficiency allows high-volume delivery of large workpieces.
- **Dial control for free adjustment of conveyance speed**
  By changing the vibration frequency and amplitude with the dial control, delivery speed can be freely adjusted.

Specifications

Model	Leaf-spring adjustment angle		Rated voltage (V)	Rated current (A)	Vibration frequency (Hz)	Weight (kg)	Cross section area of power cable (mm²)	Standard compatible controller
	α	β						
LF-30	0°~20°	10°~30°	200/220	1.5	50~90(*50/60)	25	1.25 x 3 core	C10-3VF/3VFEF C4-5B
LF-40	0°~20°	10°~30°	200/220	1.6	50~90(*50/60)	33		

*When C4-5B was used.

Dimensions Chart

Unit: mm

Model	A	B	C	D	E	F	H	I	J	K	L	M	N	P
LF-30	182.4	156.4	180.4	150.4	410	295	55	380	30	40	190	162	132	30
LF-40	196.4	166.4	186.4	154.4	500	375	55	470	30	40	250	177	147	30

Chute Specifications

Unit: mm

Applicable linear feeder	Max. length	Max. width	Max. weight (kg)
LF-30	650	120	3.5
LF-40	750	150	5.5

Note: Chute must straddle drive unit to distribute weight.

Feeder-Type Hoppers

15/30/60/100-liter Hopper Dimensions

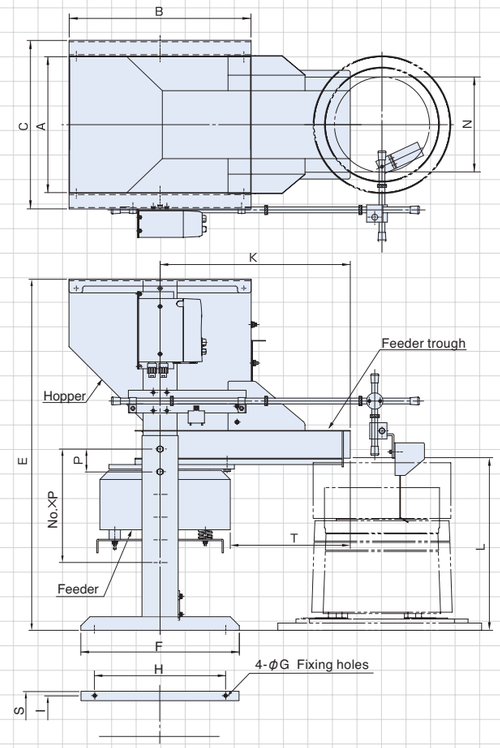

Unit: mm

Features

- By attaching a feeder to a hopper, parts delivery is extremely smoothly accomplished and running noise is kept extremely low.

Dimensions Chart, including Feeders

Unit: mm

Hopper capacity (ℓ)	Model	Compatible Parts feeders	Permissible weight of work (kg)	A	B	C	E	F	G	H	I	K	L (*1)	N	Sliding base No. x P	S	T	Weight (kg)	Electromagnetic feeder	
																			Feeder model	Rated current (A)
15	HPF-15-3815B	EA-25 ER-25B EA-30 ER-30B	24	250	350	322	675~875	320	7	270	275	380	381~580	150	5 x 50	310	225	46	CF-2	0.5
30	HPF-30-4215B	EA-25 ER-25B EA-30 ER-30B EA-38 ER-38B EA-45 ER-45B	24	300	400	372	775~975	350	7	290	325	420	380~580	150	5 x 50	360	265	50	CF-2	0.5
60	HPF-60-6030B*	ER-55B ER-65B	56	450	600	553	865~1215	500	9	400	480	600	430~780	300	8 x 50	536	(358)	140	CF-3	1.0
100	HPF-100-6030B*	ER-55B ER-65B	56	450	600	553	1015~1365	500	9	400	480	600	430~780	300	8 x 50	536	(358)	147	CF-3	1.0

Notes
*1 Hoppers come in stainless steel only.
*2 Vibration frequency: 50~70Hz; rated voltage: 200/220V; compatible controller: C10-1VFEF. (No standard model with 100/110V specifications.)
*3 Paint finish: Munsell N7.5
*4 For 15- and 30-liter hoppers, hopper heights come in 5 levels at 50mm intervals: for 60- and 100-liter hoppers, hopper heights come in 8 levels at 50mm intervals.
*5 Heavy-duty 60- and 100-liter hoppers (permissible total work weight 112kg) are available as non-standard models.
* Manufactured to order.

Digital control operated in 'Analog' way

A completely new type of digital controller that can be used with the full line-up of feeders, from high frequency mini parts feeders to small electromagnetic feeders and large size models. With 'analog-style' operation it can be adjusted very swiftly. With an auto-tuning function that eliminates the need for frequency adjust-ment, and convenient digital settings and display, drive units can be operated to their full potential.

CE RoHS

Features

- **Auto-tuning function eliminates leaf-spring adjustment** (C10-1VFEF, 3VFEF, 5VFEF)
  This digital equipment has a special advanced vibration frequency auto-tuning function. It automatically tracks resonance point changes not only from changes to input volume of workpieces, but also from mechanical changes over time, to deliver optimal vibration at all times. No leaf-spring adjustment or even frequency adjustment is necessary, thereby boosting operation efficiency and saving energy.
- **Digital setting and display makes settings easy to manage.**
  Amplitude, drive frequency, output voltage notches are all set and displayed digitally, for easy management.
- **Constant amplitude control matched to workpieces or materials** (C10-1VFEF, 3VFEF, 5VFEF)
  Amplitude can be set digitally, and an amplitude sensor allows drive at constant amplitude suited to the workpieces under conveyance.
- **Easy-to-use panel design**
  The frequency, voltage, soft start, on delay and off delay settings needed for parts feeder adjustment are located on a control panel. A rotary encoder allows 'analog-style' setting input to be changed to digital values.
- **Many external control functions**
  Choice of four speeds can be made by external signal. Two-step control through external regulating resistance. External volume adjustment via a DC4-20mA signal is also possible.
- **CE Marking conformed product**
  Required to be installed inside the control box treated with Noise filter and IP4X to make product comply to CE Marking.

C10-1VF/1VFEF/3VF/3VFEF Dimensions

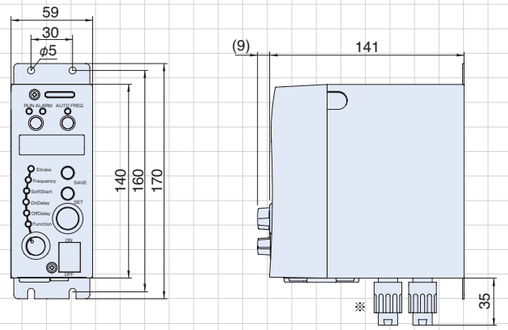

※No plug for sensor on C10-1VF/3VF

Unit: mm

C10-5VF/5VFEF Dimensions

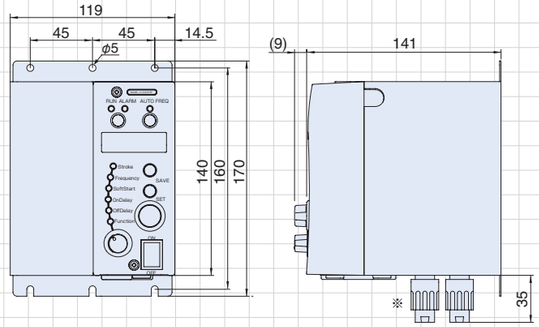

※No plug for sensor on C10-5VF

Unit: mm

C10-TR Dimensions

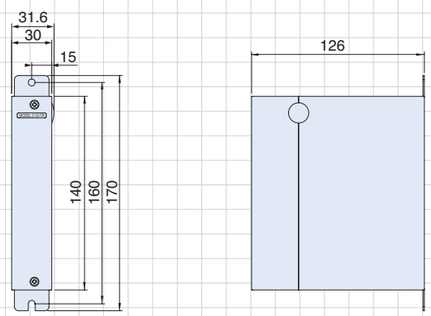

Unit: mm

By using a C10-TR power transformer unit with a standard controller, output voltage can be boosted to run an AC 200 V parts feeder from an AC 100 V power source. This is not applicable for C10-5VF(EF).

C10 Series Parts & Functions

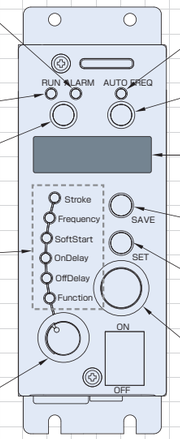

ALARM light
Lights when
-In constant amplitude or auto-tuning mode, output voltage reaches saturation and cannot track set amplitude, or
-Error occurs

RUN light
Lights while operating

RUN/STOP button
Operation can be stopped or started manually

Data display lights
Identify what is showing on data display screen. LED light indicates display mode; flashing light indicates data modification mode
Stroke: voltage (amplitude) percentage displayed
Frequency: frequency displayed
Soft start: Soft start time displayed
On delay: On delay time displayed*
Off delay: Off delay time displayed*
Function: Function detail displayed

Data display dial
Switches data shown on data display screen

AUTO FREQ light*
Lights during auto-tuning mode
Flashes during initial auto-adjusting

AUTO FREQ button*
Activates/de-activates auto-tuning

Data display screen
Displays voltage/amplitude (%), frequency, settings, and error codes

SAVE button
In settings mode, records data modifications

SET button
Switches between display mode and data modification mode
In data modification mode for stroke and frequency, press again to switch the position of a figure

Settings encoder
Modifies settings in data display screen

*You need a sensor in order to use functions with asterisk.
These functions are not available on C10-1VF, 3VF, 5VF models (exclusive to VFEF models)

Specifications

Model		C10-5VF	C10-3VF	C10-1VF	C10-5VFEF	C10-3VFEF	C10-1VFEF
Input power source		AC100~120V±10%, AC200~230V±10%, 50/60Hz					
Output	Control system	PWM system					
	Voltage	0~190V (for AC 200V input) 0~95V (for AC 100V input) Optional unit C10-TR allows output voltage in 0~190V range (Except C10-5VF(EF)) even with AC100V input					
	Vibration frequency	Half wave: 45~90Hz, Full wave: 90~180Hz Intermediate wave: 65~120Hz,High frequency: 180~360Hz					
	Max. current	5A	3A	1A	5A	3A	1A
Operating modes	Constant voltage mode	Frequency, output voltage set manually					
	Constant amplitude mode	—			Constant amplitude control at set frequency		
	Auto-tuning mode	—			With frequency auto-tuning, constant amplitude control requires no amplitude setting		
Additional features	Speed selector	Selection of up to 4 amplitude settings by means of external signal					
	Start/stop control	Start/Stop control by external signal					
	Output signal	Output signal synchronized to parts feeder operation					
	Soft start	Start-up time 0.2~4.0 secs					
	On/Off delay	—			Delay 0.2~60secs		
	Sensor power source	—			For DC 12V, max. 80mA 3P power plug		
Synchronized power output	Function	—			Power output synchronized to parts feeder operation (RUN)		
	Control system	—			On/Off control		
	Output voltage	—			As power source input to controller		
	Max. current	—			2A		
Others	Noise tolerant voltage	Above 1000V					
	Ambient temperature	0~40˚C					
	Ambient humidity	10~90% (no condensation)					
	Weight	1.5kg	0.9kg	0.8kg	1.6kg	1.0kg	0.9kg
	Case color	U75-70D (Japan Paint Industry Association)					
Compatible equipment		ER-55B,65B,75B	ER-30B,38B,45B EA-25,30,38,45 LF-30,40	ER-25B EA-15,20 LFBR-350B,450B,600B LFB-300,400,550 LFG-600,750,900 ME-08C,14C HME-08C,14 LFB-02,04 HLFB-02,04C LF-02,04 MF-04C,15C HSE-14	ER-55B,65B,75B	ER-30B,38B,45B EA-25,30,38,45 LF-30,40	ER-25B EA-15,20 LFBR-350B,450B,600B LFB-300,400,550 LFG-600,750,900 ME-08C,14C HME-08C,14 LFB-02,04 HLFB-02,04C LF-02,04 MF-04C,15C HSE-14

Note: Specifications above are applied for later than ver.4.

Equipment Combinations

For source voltage AC200/220V

Single Drive

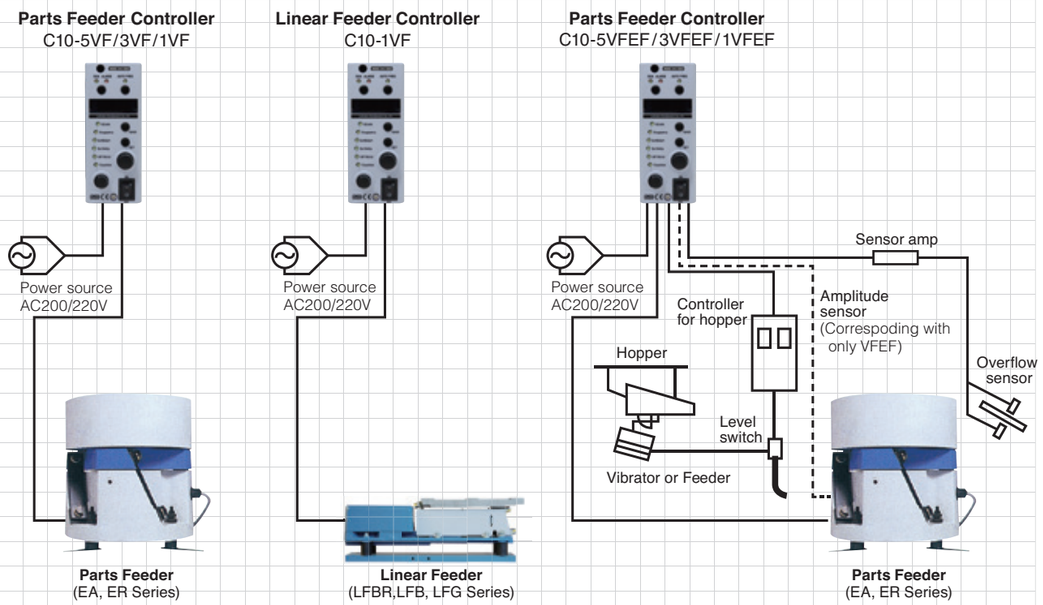

Twin Drive

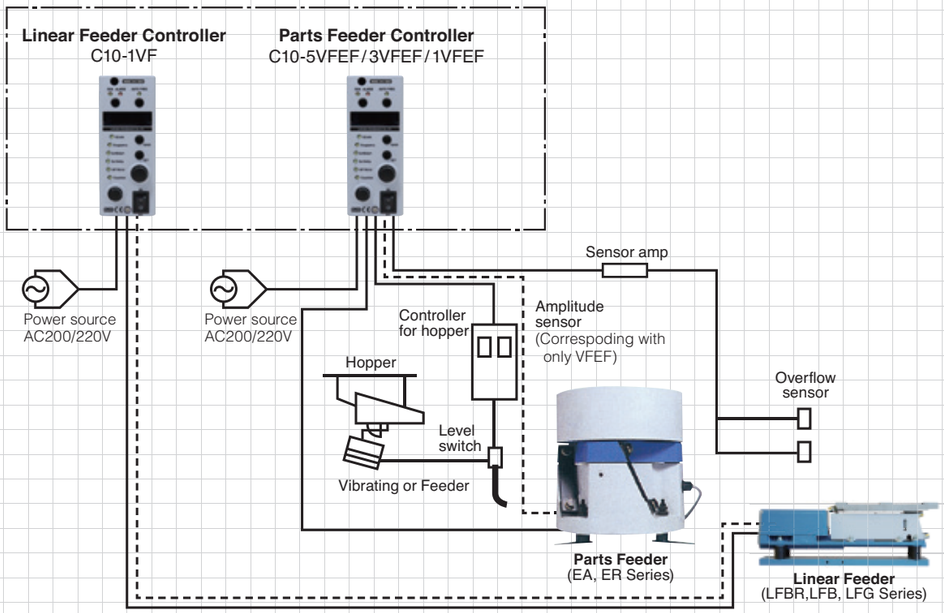

For source voltage AC100/110V

Single Drive

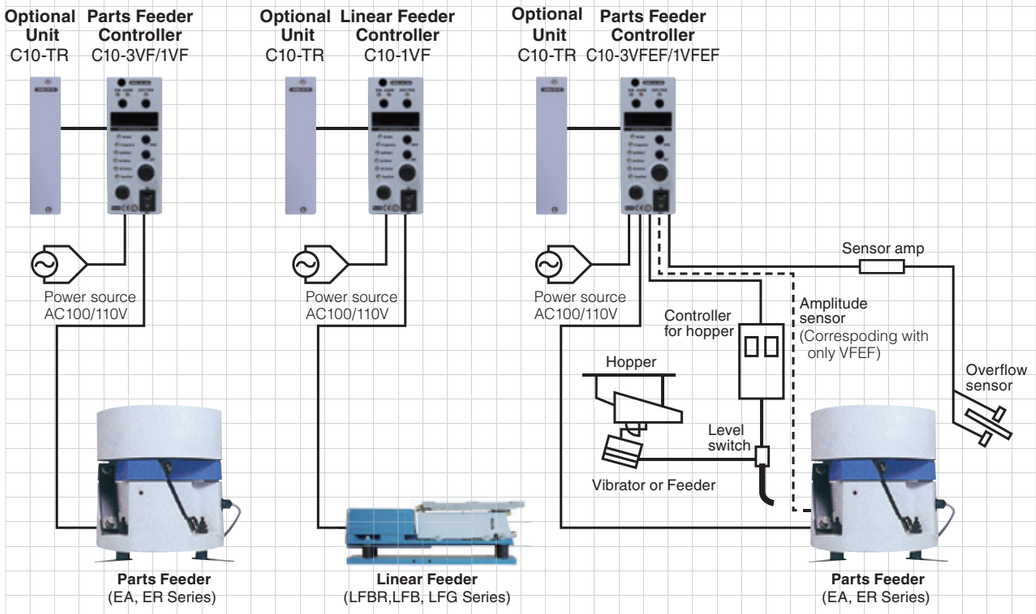

Twin Drive

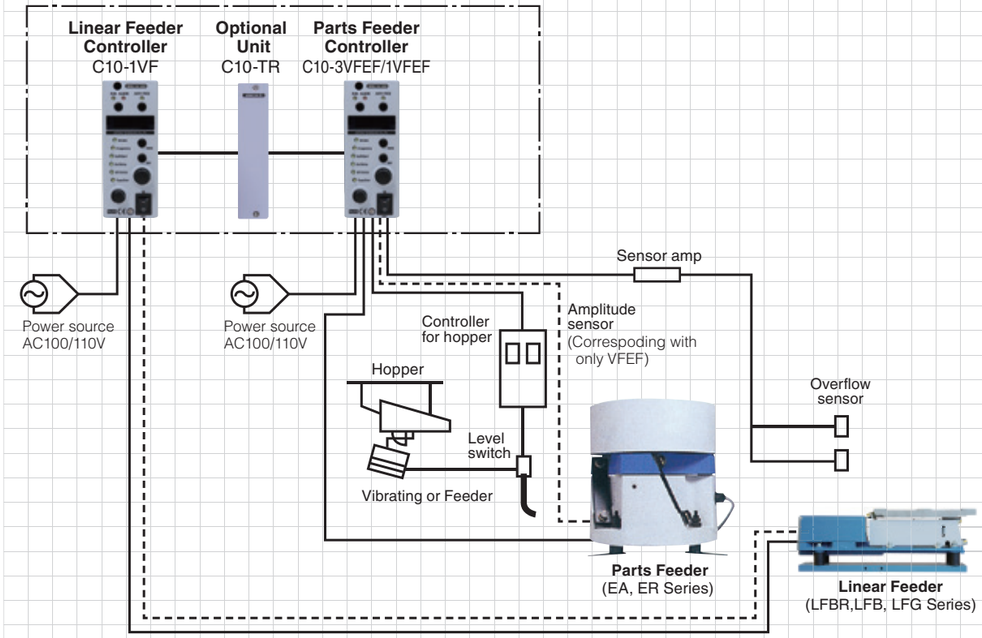

ME/HME/HSE Series –*High Frequency Mini Parts Feeders*

High-speed, high-precision handling of micro-sized parts and electronic chips. Compact design and versatility to handle a wide range of small parts.

Designed for the automatic conveyance and stable delivery of delicate components that are easily scratched or damaged, these feeders provide high-speed, high-precision parts handling. With the fine vibration of full wave drive and a soft start function, all types of tiny parts for cameras, watches etc. can be handled. Compact design takes up minimal space.

ME-14C

ME-08C

HME-08C

Features

- **Smooth, reliable, orderly presentation of tiny, thin parts**
  High vibration frequency and small amplitude allow for the orderly delivery of micro-sized, thin and complex-shaped parts, which is hard to achieve with conventional feeder vibration characteristics.
- **Highly accurate sorting and conveyance**
  Bouncing of workpieces during conveyance is reduced, and even slight variations in shape and weight distribution of small parts can be detected for accurate sorting.
- **No problems at connecting points**
  With little vibration displacement, there is no damage to workpieces caused by gaps between bowl and chute or chute and non-vibrating parts.
- **High vibration frequency gives high speed delivery**
  High vibration frequency conveys workpieces smoothly, speedily and with no resistance, to supply a stable quantity with little variation, for a significant improvement in efficiency.
- **No readjustment of leaf-spring necessary**
  Once set, leaf-spring requires no further adjustment. With feedback control for amplitude, c hanges over time in voltage or load do not cause fluctuations in vibration.
- **Compact design, with a height adjustment function**
  Down-sized design for maximum space-saving, with a vibro-isolating base. Bowl height can be adjusted within 3 mm range to simplify positioning.

Specifications

Model	Rated Voltage (V)	Rated Current (A)	Vibration frequency (Hz)	Weight (kg)	Loaded weight (kg)	Max. bowl diameter (mm)	Compatible standard controller
ME-08C	100/110	0.30	100～180	2.5	0.6	φ140	C10-1VF C10-1VFEF C9-03VFTC
ME-14C		0.55		7.8	2.0	φ230	
HME-08C		0.15	220～360	2.5	0.6	φ140	
HME-14		0.30		7.8	2.0	φ230	
HSE-14		0.30		9.3	2.0	φ230	

Note: Loaded weight is permissible weight of bowl and work.

ME-08C

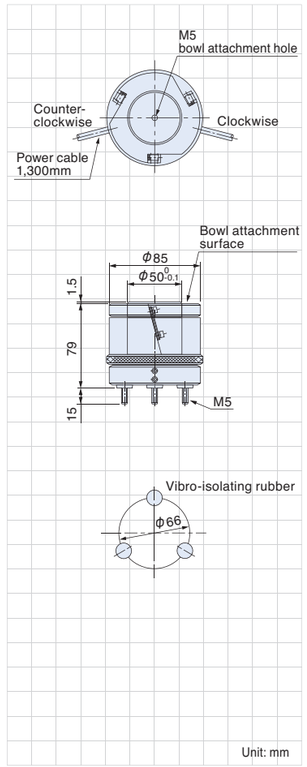

HME-14C / ME-14

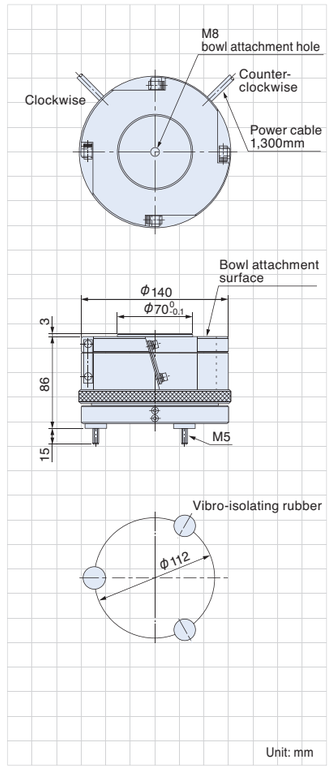

HSE-14

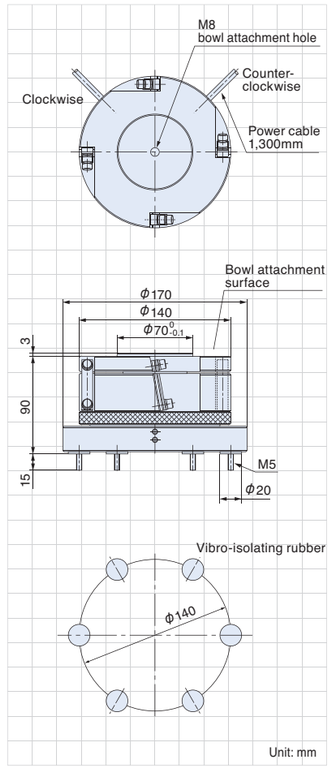

HME-08C New

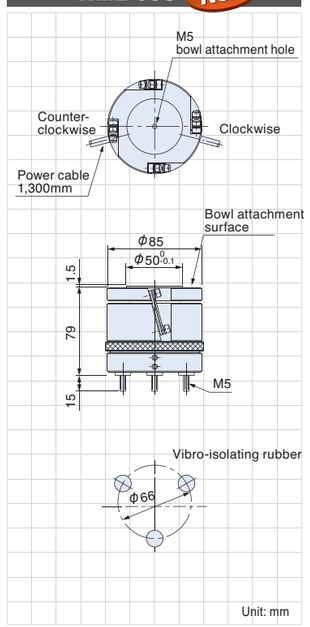

ME / HME / HME Bowl

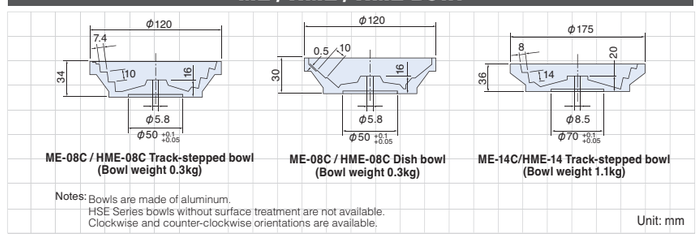

ME-08C / HME-08C Track-stepped bowl (Bowl weight 0.3kg)

ME-08C / HME-08C Dish bowl (Bowl weight 0.3kg)

ME-14C/HME-14 Track-stepped bowl (Bowl weight 1.1kg)

Notes: Bowls are made of aluminum.
HSE Series bowls without surface treatment are not available.
Clockwise and counter-clockwise orientations are available.

ME / HME / HME Structural Diagram

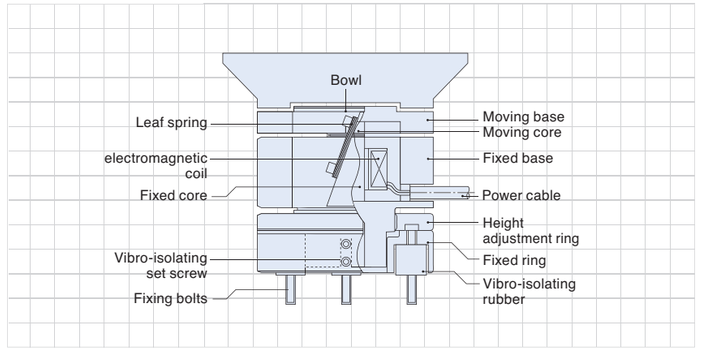

LFB/HLFB Series – *Leaf-Spring Vibro-Isolating Type*

Ideal vibration characteristics to cut bouncing

A high-precision electromagnetic drive unit ideal for use with chutes for precision parts, to meet present-day requirements for rapid processing of micro-sized workpieces. Vibro-isolating leaf-springs are installed front and rear to absorb rebound, and vibration characteristics can be adjusted to match the workpiece. Giving uniform vibration the whole length of the trough, this series provides smooth delivery of the most delicate, easily damaged parts with minimal bouncing.

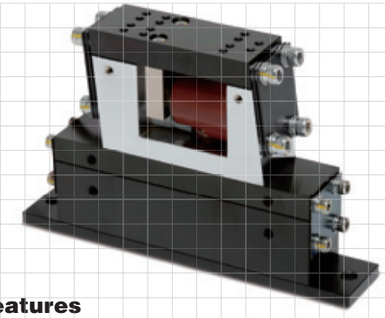

LFB / HLFB - 02 / 04 Dimensions

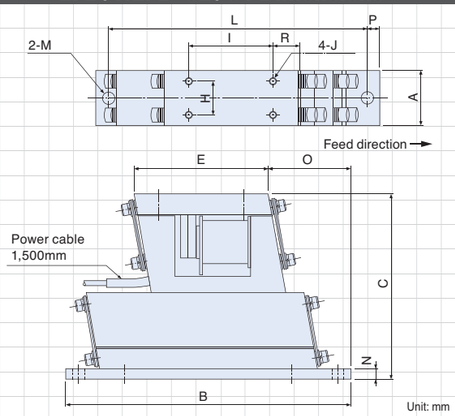

HLFB - 04C Dimensions

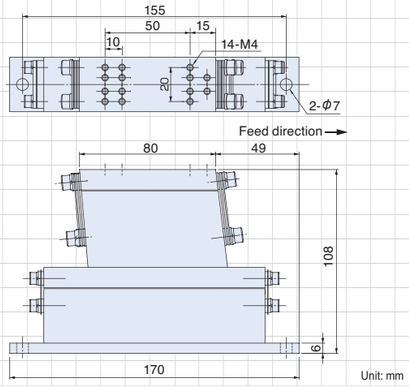

Features

- **Leaf-spring vibro-isolating type ideal for precision parts**
  This leaf-spring vibro-isolating series is ideal for micro-sized, flat and precision parts.
- **Minimizes bouncing**
  Adjustable vibration characteristics give increased delivery efficiency while minimizing workpiece bouncing.
- **Compact and high precision**
  Compact unit accommodates demands for rapid processing, providing high precision conveyance of micro-sized and precision parts.
- **Reduce Vibration Reaction Force to 1/3 (HLFB-04C)**
  By revising weight balances of movable base and fixed base, it reduced vibration reaction force to 1/3 compared from conventional model.
- **Realized consistent handling speed of works (HLFB-04C)**
  It is able to realize stable supply of work piece with equalize handling speed from chute to outlet by improving degree of leaf springs.
- **14 tapped holes for chute installation (HLFB-04C)**
  By gaining number of tapped hole for chute installation on movable base from 4 to14, it is suitable for many working conditions.

Specifications

Model	Rated Voltage (V)	Rated Current (A)	Vibration frequency (Hz)	Weight (kg)	Standard compatible controllers
LFB-02	100/110	0.12	100～180	1.2	C10-1VF C10-1VFEF C9-03VFTC
LFB-04	100/110 200/220	0.16 0.08	100～180	2.7	
HLFB-02	100/110	0.25	220～360	1.2	
HLFB-04C	100/110	0.30	220～360	2.7	

Dimensions Chart

Unit: mm

Model	A	B	C	E	H	I	J	L	M	N	O	P	R
HLFB/LFB-02	22	130	86	65	15	40	M3	120	φ6	4.5	45	5	13
LFB-04	32	170	108	80	20	50	M4	155	φ7	6	49	7.5	15

Chute Specifications

Unit: mm

Compatible linear feeder	Max. length	Max. width	Max. weight (kg)
HLFB/LFB-02	180	20	0.2
LFB-04	240	30	0.4
HLFB-04C	240	30	0.4

Note: Chute must straddle drive unit to distribute weight.

C9-03VFTC – *Variable Frequency Digital Controllers*

Digital Control for Revolutionary Delivery of Micro-sized Parts

This new digital controller represents a major advance in the control of high frequency mini parts feeders for delivery of electronic chips and other micro-sized parts. Auto-tuning makes frequency adjustment unnecessary, and with its convenient digital settings and display it enables high frequency mini parts feeders to be operated to their full potential.

Dimensions

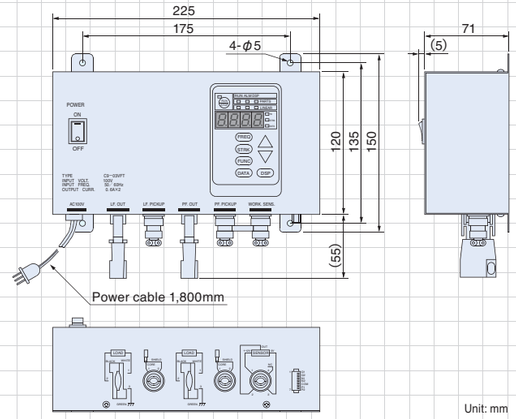

Features

- **Auto-tuning function eliminates frequency adjustments**
  This digital equipment has an advanced vibration frequency auto-tuning function. It automatically tracks resonance point changes not only from variations in workpiece input volume, but also from mechanical changes over time, to deliver optimal vibration at all times. No leaf-spring adjustment or even frequency adjustment is necessary, thereby boosting operating efficiency and saving energy.
- **Digital setting and display makes settings easy to manage**
  Amplitude, drive frequency, output voltage notches are all set and displayed digitally, for easy management.
- **Constant amplitude control matched to workpieces**
  Amplitude can be set digitally, and an amplitude sensor keeps drive at a uniform amplitude suited to the workpieces under conveyance.
- **One controller for all**
  One controller can control both parts feeders or linear feeders.
- **Computerized control delivers optimal drive**

Specifications

Model		C9-03VFTC
Input Power source		AC100~230±10%, 50/60Hz
Control system		PWM system
Output	Voltage	0～95V
	Vibration frequency	Full wave: 100~180Hz High frequency: 220~360Hz
	Max. current	0.6A
Operating modes	Auto-tuning mode	Automatically senses particular vibration frequencies of parts feeder or linear feeder and controls drive at that frequency
	Constant amplitude mode	Digital setting for amplitude Amplitude controlled to be uniform by means of amplitude sensor
Additional features	Start/Stop control	Start/stop control by external signal
	Overflow control	Sensor allows parts feeder overflow control On/off delay: Variable, 0.2~60 secs
	Sensor power source	DC12V
	Output signal	Output signal synchronized to operation of parts feeder
	Soft start	Variable, 0.2~0.4 secs
Others	Noise tolerant voltage	Above 1,000V
	Ambient temperature	0~40°C
	Ambient humidity	10~90% (no condensation)
	Case color	Beige (5Y7/1)
	Weight	2.4kg
Our compatible Parts feeders		ME-08C, ME-14C, HME-08D, HME-14
Our compatible Linear feeders		LFB-02,04, HLFB-02,04C,